SMART N CLEVER™
MORE THAN INTELLIGENT

FRIGID-X™ SUB-ZERO VORTEX™ TOOL COOLING MIST SYSTEM

When lubrication is required as well as cooling, lubricating mist can be reduced and cooling enhanced

WHAT ARE THEY - REASONS TO USE

Heavy coolant can be messy, costly and must be carefully maintained. In addition, dry machining is not always possible due to the need for lubrication or additional cooling that cold air alone cannot provide. The unique patent pending low cost **Frigid-X™ Sub-Zero Vortex ™ Tool Cooling Mist System** is ideal for such applications. The unit is comprised of a coolant/lubricant suction system which draws any water based liquid into a specially designed delivery system. This cools the liquid to deliver a very cold fluid "mist" at around 40 degrees F (5 degrees C). This cooling allows for as much as 20% less coolant needed, faster production rates and improved quality.

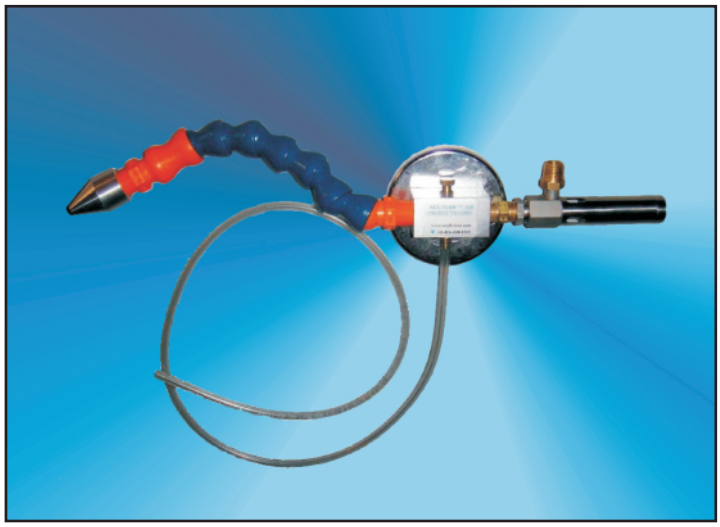

HOW IT WORKS:

The liquid is cooled by means of a small vortex tube that uses around 5 SCFM (142 SLPM) at a maximum of 50 psig (3.5 bar). Pressure can be adjusted up or down slightly to avoid freezing of the liquid or to get a colder temperature. An adjusting screw controls the level of mist required. Liquid is siphoned into the unit using a long plastic tube connected to the main unit. A heavy duty removable magnet secures the **Sub-Zero Vortex™ Tool Cooling Mist System** onto a machine. The magnet can also be removed and mounting holes may be used to secure the mist system. All you need is the liquid to cool and/or lubricate and a small amount of filtered (clean) compressed air at 50 psig (3.5 bar). No electrical components, no expensive pumps or moving parts except for the adjusting screw assures long life and maintenance free operation.

Frigid-X™ Sub-Zero Vortex™ Advantages

- No electricity required – simplicity in design
- low cost
- reduces coolant/lubricant cost using by less fluid
- improves safety with less mist
- no moving parts except for an adjusting screw for the fluid
- small and lightweight, portable
- maintenance free operation

Frigid-X™ Sub-Zero Vortex™ Advantages

- Solid Carbide End Mills
- wherever lubrication is required in machining
- when cooling is required beyond the capability of cold air alone

Nex Flow™ Air Products Corp. 10520 Yonge Street, Unit 35B-220 Richmond Hill, ON, Canada, L4C 3C7
Tel: +1-416-410-1313 Fax: +1-416-410-180 or +1-716-626-3001

SUB ZERO VORTEX ™ TOOL COOLING SYSTEM

DIMENSIONS

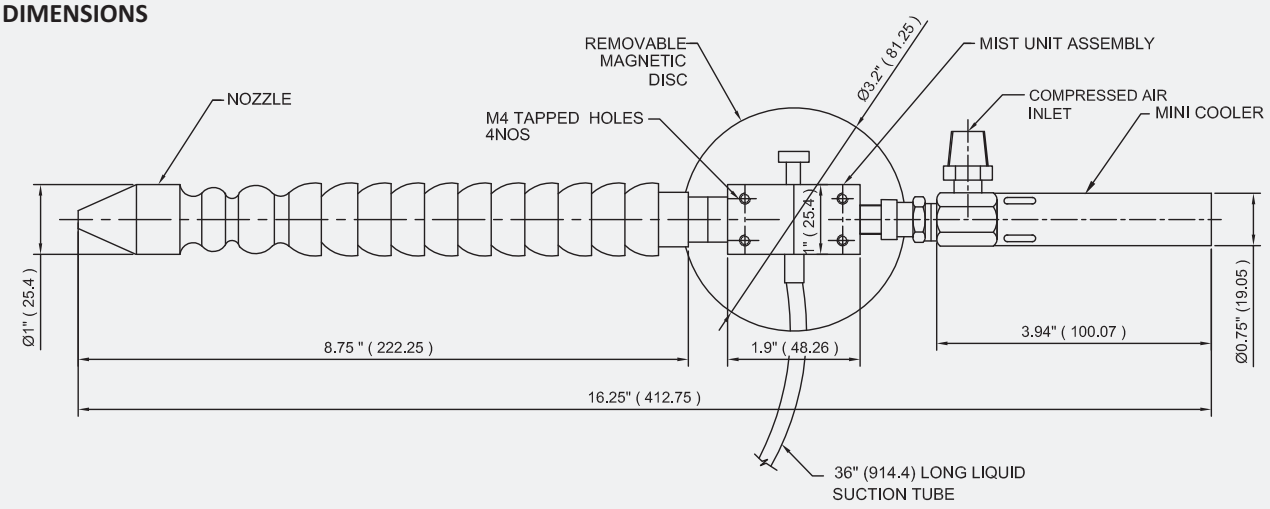

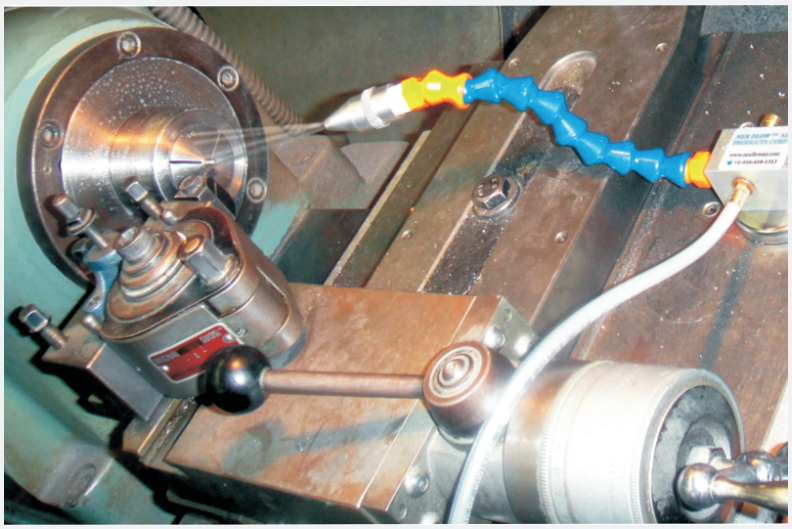

MIST COOLANT & LUBRICANT

The **Frigid-X™ Sub-Zero Vortex™ Tool Cooling Mist System** may use any water based material including water itself. Non-water based materials are not recommended as they may dry and clog the system. If you need a coolant/lubricant material Nex Flow can also supply:

PART NO.	DESCRIPTION
58LUBECOOL-1	Coolant/Lubricant in 4 X1 -gallon case (16 L)
58LUBECOOL-5	Coolant/Lubricant in 5 – gallon pail (20L)

SUB ZERO VORTEX ™ TOOL COOLING SYSTEM

PART NO.	DESCRIPTION
58208	Sub Zero Vortex™ Mist Tool Cooling SystemC/w Mist Handing unit, Mini Cooler, Magnet
58008	Mist handling Unit only
99929L	Magnet Only
56008F	Mini Cooler Only

ACCESSORIES	
90004	Filter with auto drain
90008	Regulator with guage
90013	Manual Shutoff valve for vortex mini cooler - 1/8" NPT