SMART N CLEVER™ MORE THAN INTELLIGENT

FRIGID-X™ TOOL COOLING SYSTEM

Produce cold air from compressed air to cool machine tools and other applications to replace messy misting systems, improve product quality and increase production speeds

WHAT ARE THEY - REASONS TO USE

Frigid-X™ Tool Cooling System for dry machining applications - replaces polluting and often toxic mist systems to improve dry machining operations. No mess, no residue and low in cost. It is efficient and can improve dry machining operations and assist in spot cooling applications for a variety of industrial machining processes by increasing machining rates and extending tool life. Produces cold air at approximately 50° F (28° C) below supply air temperature. The unit is muffled for quiet operation. No moving parts assures long life, maintenance free operation while extending tool life and improving production rates. It can prevent smearing of metal or plastics and eliminates wheel loading. Factory set for optimum cooling effect and to prevent freeze up. Can often replace costly mist coolants and certainly improves the quality and output of all types of dry machining operations from metals to plastics. Unit is low cost, no electricity with no moving parts and is essentially maintenance free.

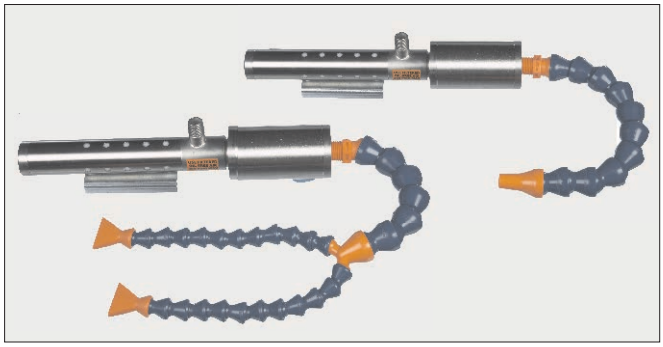

FRIGID-X™ TOOL COOLER APPLICATIONS:

- Sharpening Tools
- Routing
- Machining Plastics
- Drill and cutter grinding
- Milling, Drilling, Routing and Surface Grinding
- Plunge & Form Grinding
- Setting Hot Melt Adhesives
- Laser Cutting
- Tire and Rubber Grinding
- Band Saw Blade Cooling
- Chill Roll Nip Cooling

WHY THE FRIGID-X™ TOOL COOLER OVER OTHERS:

All Metal Parts, Stainless Steel Body. Tests Show Frigid-X™ consistently quieter than competition!

FRIGID-X™ ADJUSTABLE SPOT COOLER ADVANTAGES:

- No moving parts.
- Quiet
- Driven by air not electricity.
- Small and lightweight - portable.
- Low in cost compared to most others
- Superior design and performance
- Maintenance free operation
- Made of durable stainless steel and metal arts – no cheap plastic parts
- Improves production rates and finished part remains dry
- Prevents burning
- Improves tolerance control
- Eliminates coolant costs
- System uses strong magnetic base

FRIGID-X™ TOOL COOLER SYSTEM - HOW IT WORKS

Compressed air enters at point (A) into the vortex tube component of the tool cooling. The vortex tube splits the compressed air into a cold (B) and hot (C) stream of air. The hot air from the vortex tube is vented to the atmosphere at point (D) after being muffled to reduce noise. Cold air enters into the muffler (E) and then distributed through the hose distribution kit (F) and onto the tool being cooled. A strong magnet (G) holds the tool cooler onto the machine

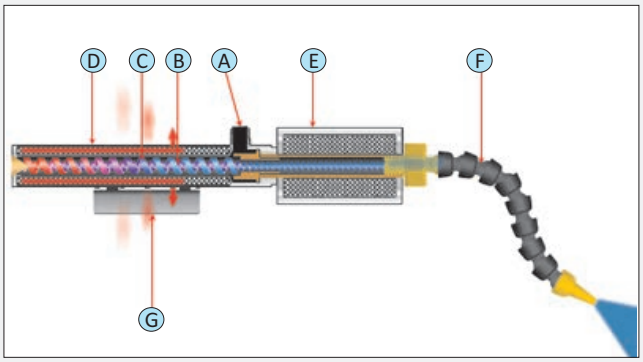

Nex Flow™ Air Products Corp. 10520 Yonge Street, Unit 35B-220 Richmond Hill, ON, Canada, L4C 3C7
Tel: +1-416-410-1313 Fax: +1-416-410-180 or +1-716-626-3001

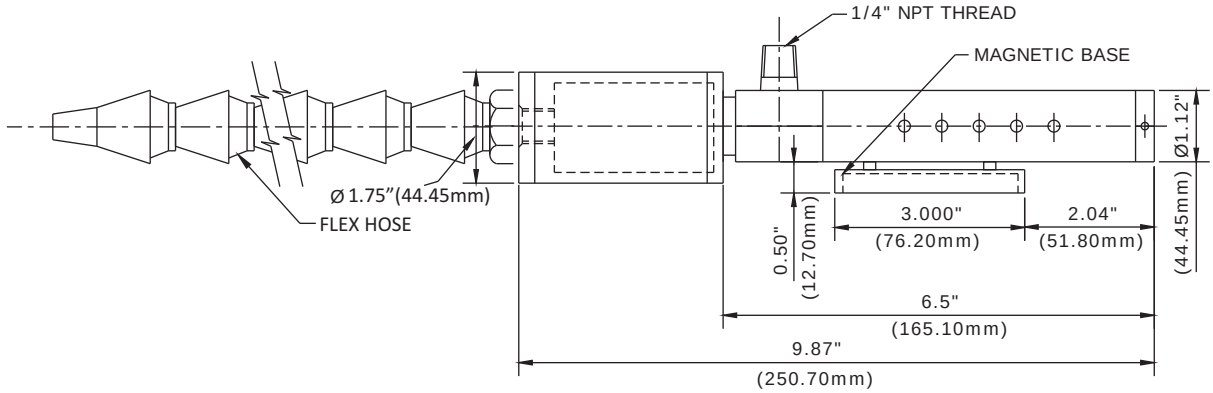

FRIGID-X™ TOOL COOLING SYSTEM

SPECIFICATIONS

MODEL NO.	INLET PRESSURE PSIG (Bar)	AIR CONSUMPTION SCFM (SLPM)	SOUND LEVEL dBA
57015FS, 57015FD	100 (6.9)	15 (425)	70
57025FS, 57025FD	100 (6.9)	25 (708)	78
57030FS, 57030FD	100 (6.9)	30 (850)	82
57040FS, 57040FD	100 (6.9)	40 (1133)	83

Single Point Hose Kit

Double Point Hose Kit

A Model 57025FS Frigid-X™ Tool Cooler is used on a grinding application to reduce the heat and extend wheel life.

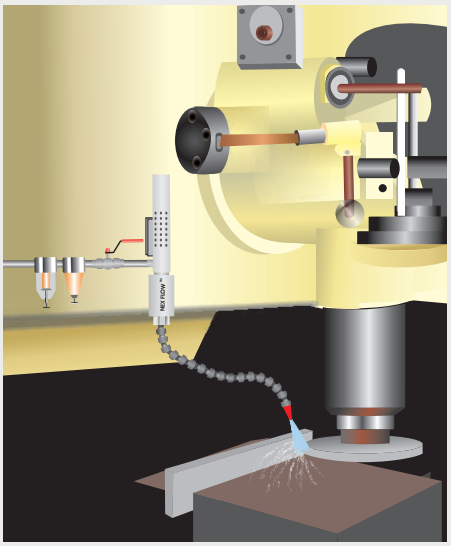

A Series of Model 57015FS Frigid-X™ Tool Coolers are used to cool the slitting cutters in a continuously moving paper roll slitting machine.

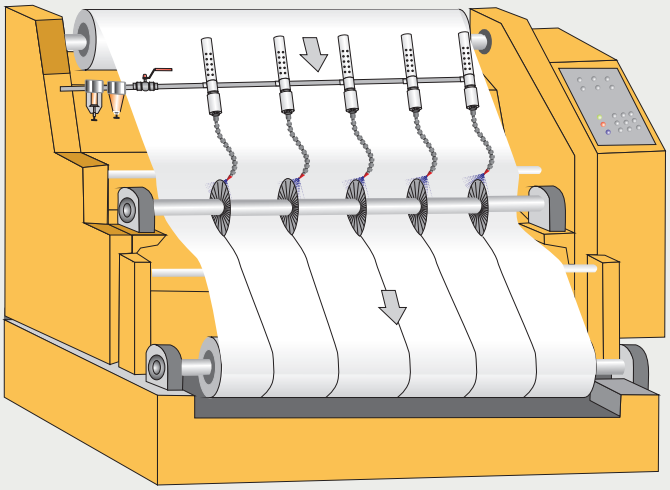

E-mail:- ▪ sales@nexflow.com ▪ sales@nexflowair.com ▪ sales@nex-flow.com
Web:- ▪ www.nexflow.com ▪ www.nexflowair.com ▪ www.nex-flow.com

USE AND SELECTION OF FRIGID-X™ TOOL COOLER

Always use clean, dry compressed air. A manual filter is supplied with every 15 SCFM system and a filter with automatic drain with larger sizes to insure dry air. If oil is a major problem in the compressed air line, an oil removal filter is also recommended. The temperature of the air can be controlled by reducing the pressure using either a regulator or manual shut-off valve. A solenoid valve may also be connected into the machine operation to turn the air supply to the cooling unit on-off as it is needed, thereby conserving compressed air usage.

The tool cooler is available in several capacities - 15, 25, 30, and 40 SCFM in addition, there are two versions - a single point outlet and dual point outlet system.

The Single Point versions are used where a concentrated airflow is needed such as in drilling or grinding. The Dual point versions are used for applications where the heat to be removed is generated over larger surface areas such as in band sawing, milling, application of hot melt adhesives or on chill rolls. One system can be converted to the other by changing hose kits. For most applications the 15 SCFM units are satisfactory but for harder materials such as titanium, or faster machining speeds, the capacities used should be higher. The size depends on the application and an application engineer can assist you in choosing the right model.

MODEL 57015FS
Includes Tool Cooler Single, Point Hose Kit, 3/8” (10mm)
Cone Nozzle, 1-1/4” (32mm)
Fan Nozzle, Filter with Manual Drain

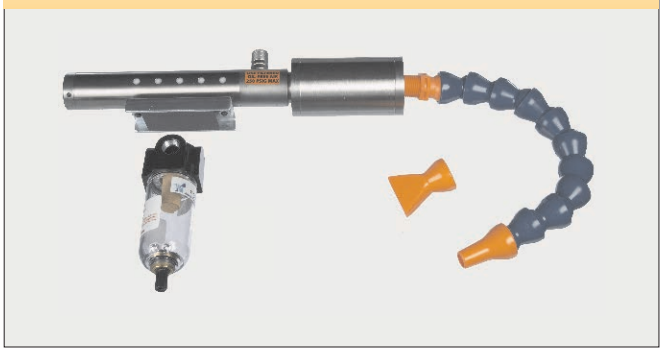

MODEL 57015FD
Includes Tool Cooler, Dual Point Hose Kit,
Two (2)1/4” (6mm) Cone Nozzle, 1” (25.4mm)
Fan Nozzle, Filter with Manual Drain

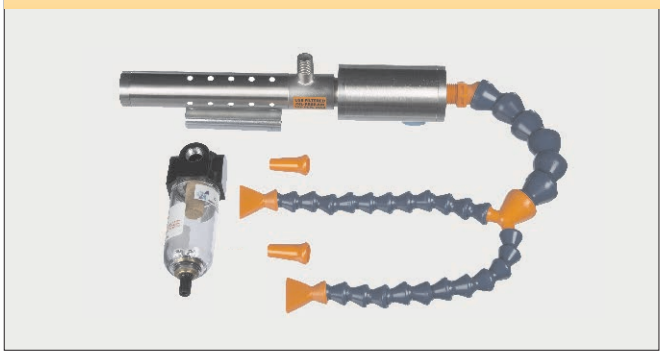

MODEL 57025FS, 57030FS, 57040FS
Includes Tool Cooler, Single Point Hose Kit, 3/8” (10mm)
Cone Nozzle, 1-1/4” (32mm)
Fan Nozzle, Filter with Automatic Drain

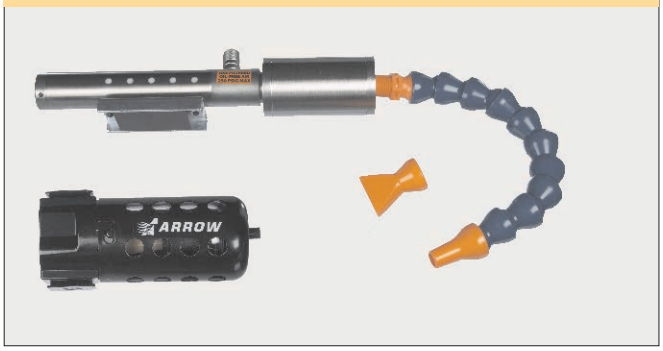

MODEL 57025FD, 57030FD, 57040FD
Includes Tool Cooler, Dual Point Hose Kit,
Two (2)1/4” (6mm) Cone Nozzle, 1” (25.4mm)
Fan Nozzle,Filter with Automatic Drain

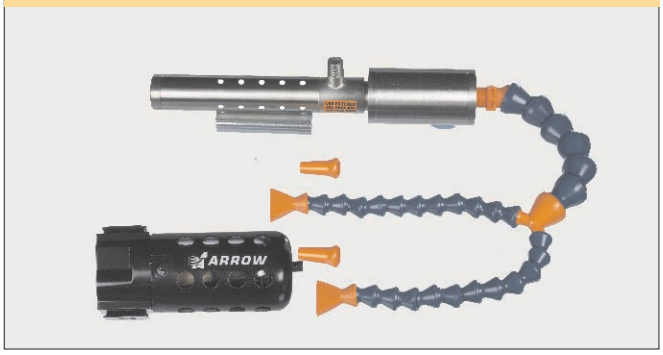

FRIGID-X™ TOOL COOLING SYSTEM

PART NO.	DESCRIPTION
56015F	Tool Cooler only - 15 SCFM Capacity - Standard Cooling Use
56025F	Tool Cooler only - 25 SCFM Capacity - Higher Cooling Use
56030F	Tool Cooler only - 30 SCFM Capacity - Very High Cooling Use
56040F	Tool Cooler only - 40 SCFM Capacity - Highest Cooling Use
57015FS	Tool Cooling System includes 15 SCFM Tool Cooler plus filter with manual drain and single point hose kit.
57015FD	Tool Cooling System includes 15 SCFM Tool Cooler plus filter with manual drain and dual point hose kit.
57025FS	Tool Cooling System includes 25 SCFM Tool Cooler plus filter with automatic drain and single point hose kit.
57025FD	Tool Cooling System includes 25 SCFM Tool Cooler plus filter with automatic drain and dual point hose kit.
57030FS	Tool Cooling System includes 30 SCFM Tool Cooler plus filter with automatic drain and single point hose kit.
57030FD	Tool Cooling System includes 30 SCFM Tool Cooler plus filter with automatic drain and dual point hose kit.
57040FS	Tool Cooling System includes 40 SCFM Tool Cooler plus filter with automatic drain and single point hose kit.
57040FD	Tool Cooling System includes 40 SCFM Tool Cooler plus filter with automatic drain and dual point hose kit.

ACCESSORIES	
59001	Single Point Hose Kit - includes 3/8” (10 mm) cone nozzle and 1-1/4” (32 mm) fan nozzle
59002	Dual Point Hose Kit - includes two 1/4” (6 mm) cone nozzles and two 1” (25 mm) fan nozzles
90003	Manual filter -1/4” NPT, 27 SCFM (765 SLPM)
90004	Filter with automatic drain - 1/4” NPT, 43 SCFM (1359 SLPM)
90005	Oil Removal filter with automatic drain, 3/8” NPT, 15 to 37 SCFM (425 to 1048 SLPM)

E-mail:- ▪ sales@nexflow.com ▪ sales@nexflowair.com ▪ sales@nex-flow.com
Web:- ▪ www.nexflow.com ▪ www.nexflowair.com ▪ www.nex-flow.com

SMART N CLEVER™
MORE THAN INTELLIGENT

FRIGID-X™ SUB-ZERO VORTEX™ TOOL COOLING MIST SYSTEM

When lubrication is required as well as cooling, lubricating mist can be reduced and cooling enhanced

WHAT ARE THEY - REASONS TO USE

Heavy coolant can be messy, costly and must be carefully maintained. In addition, dry machining is not always possible due to the need for lubrication or additional cooling that cold air alone cannot provide. The unique patent pending low cost **Frigid-X™ Sub-Zero Vortex ™ Tool Cooling Mist System** is ideal for such applications. The unit is comprised of a coolant/lubricant suction system which draws any water based liquid into a specially designed delivery system. This cools the liquid to deliver a very cold fluid "mist" at around 40 degrees F (5 degrees C). This cooling allows for as much as 20% less coolant needed, faster production rates and improved quality.

HOW IT WORKS:

The liquid is cooled by means of a small vortex tube that uses around 5 SCFM (142 SLPM) at a maximum of 50 psig (3.5 bar). Pressure can be adjusted up or down slightly to avoid freezing of the liquid or to get a colder temperature. An adjusting screw controls the level of mist required. Liquid is siphoned into the unit using a long plastic tube connected to the main unit. A heavy duty removable magnet secures the **Sub-Zero Vortex™ Tool Cooling Mist System** onto a machine. The magnet can also be removed and mounting holes may be used to secure the mist system. All you need is the liquid to cool and/or lubricate and a small amount of filtered (clean) compressed air at 50 psig (3.5 bar). No electrical components, no expensive pumps or moving parts except for the adjusting screw assures long life and maintenance free operation.

Frigid-X™ Sub-Zero Vortex™ Advantages

- No electricity required – simplicity in design
- low cost
- reduces coolant/lubricant cost using by less fluid
- improves safety with less mist
- no moving parts except for an adjusting screw for the fluid
- small and lightweight, portable
- maintenance free operation

Frigid-X™ Sub-Zero Vortex™ Advantages

- Solid Carbide End Mills
- wherever lubrication is required in machining
- when cooling is required beyond the capability of cold air alone

Nex Flow™ Air Products Corp. 10520 Yonge Street, Unit 35B-220 Richmond Hill, ON, Canada, L4C 3C7
Tel: +1-416-410-1313 Fax: +1-416-410-180 or +1-716-626-3001

SUB ZERO VORTEX ™ TOOL COOLING SYSTEM

DIMENSIONS

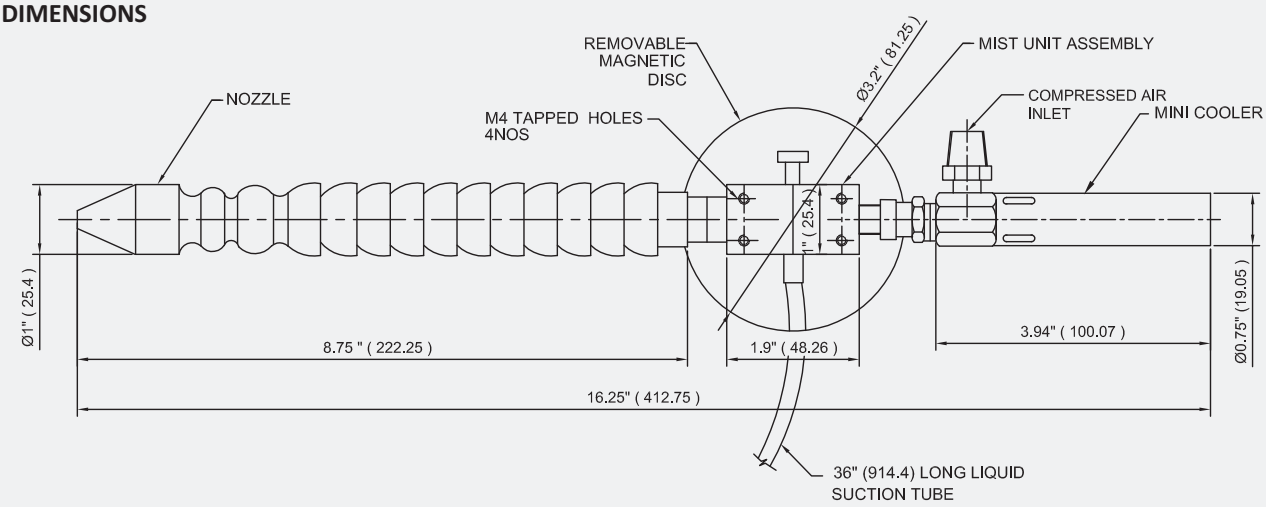

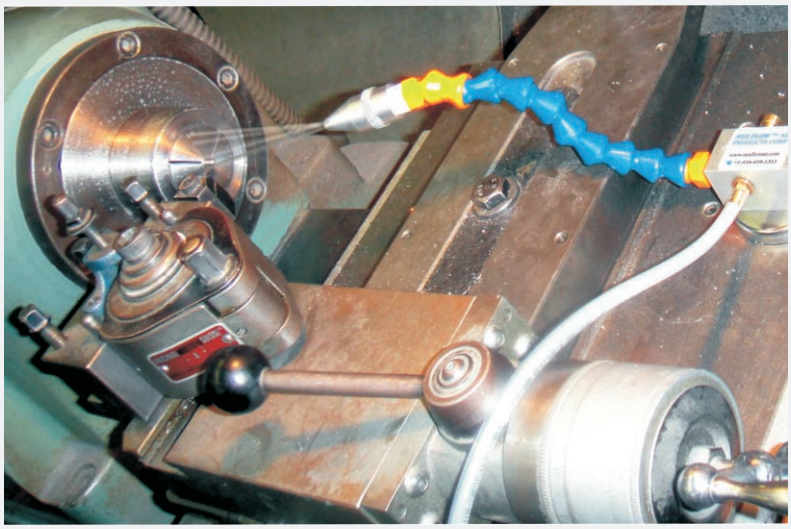

MIST COOLANT & LUBRICANT

The **Frigid-X™ Sub-Zero Vortex™ Tool Cooling Mist System** may use any water based material including water itself. Non-water based materials are not recommended as they may dry and clog the system. If you need a coolant/lubricant material Nex Flow can also supply:

PART NO.	DESCRIPTION
58LUBECOOL-1	Coolant/Lubricant in 4 X1 -gallon case (16 L)
58LUBECOOL-5	Coolant/Lubricant in 5 – gallon pail (20L)

SUB ZERO VORTEX ™ TOOL COOLING SYSTEM

PART NO.	DESCRIPTION
58208	Sub Zero Vortex™ Mist Tool Cooling SystemC/w Mist Handing unit, Mini Cooler, Magnet
58008	Mist handling Unit only
99929L	Magnet Only
56008F	Mini Cooler Only

ACCESSORIES

90004	Filter with auto drain
90008	Regulator with guage
90013	Manual Shutoff valve for vortex mini cooler - 1/8" NPT

E-mail:- ▪ sales@nexflow.com ▪ sales@nexflowair.com ▪ sales@nex-flow.com
Web:- ▪ www.nexflow.com ▪ www.nexflowair.com ▪ www.nex-flow.com