GSM/3G/4G Temp&Power Status Monitoring T201 used for remote monitoring site temperature & Power Status send SMS or call to 6 users

-55℃~+125℃:0.1℃

1 Temp & 1 Siren Output & 2 Wired Switches

1 Relay output with SMS remote control or dial in

1 Relay output can be activated when Temp&Power alarm and normal

GSM Temperature Alarm Power Failure SMS Alert

User Manual

Model: T201

Ver 1.0 Date Issued: 2020-01-18

Table of contents

1. Brief introduction ---------- 2

2. Safety Directions ---------- 2

3. Standard Packing list ---------- 3

4. Physical Layout ---------- 3

5. Features ---------- 4

6. Settings (SMS Commands) ---------- 5

7. Installation---------- 14

8. Technical specifications---------- 16

9. Important informa---------- 16

10. Maintenance ---------- 16

11. Warranty ---------- 17

This handbook has been designed as a guide to the installation and operation of T201
Statements contained in the handbook are general guidelines only and in no way are designed to supersede the instructions contained with other products.
We recommend that the advice of a registered electrician be sought before any Installation work commences.
Its employees and distributors, accept no liability for any loss or damage including consequential damage due to reliance on any material contained in this handbook.
Its employees and distributors, accept no liability for GSM Network upgrading or SIM Card upgrading due to the technology specifications contained in this handbook.

1. Brief introduction

The GSM SMS Environment Alarm T201 is special for remotely monitoring site temperature, power status through wireless GSM Network. When the temperature, power status exceed high threshold or low threshold value, it will send SMS alert or call to 6 preset mobile phone immediately.

It is an automation system. When the temperature, power alarm and normal, it can link to Realy1 output actions, this is very useful when the temperature exceed appointed value, need switch on the air-conditioning immediately, or when water overflow and need switch on the dryer.

A relay0 with dial-in or SMS remote control. Up to 200 tel. numbers can be authorized for it. Because calls are not answered dial-in control within GSM is free of charge. (it only checks the caller’s number and - if the number is authorized - responds with relay activation.) This can be used for parking latch control, GSM gate opener, remote control machine, etc.

A siren output.when Alarm occurrence,it will output for 30 seconds.

It can report site environment in interval.

Rechargeable Backup Battery inside can last 6 hours.

2. Safety Directions

Safe Startup

Do not use GSM SMS IR Controller when using GSM equipment is prohibited or might bring disturbance or danger.

Interference

All wireless equipment might interfere network signals of GSM SMS IR Controller and influence its performance.

Avoid Use at Gas Station

Do not use GSM SMS IR Controller at a gas station. Power off GSM SMS IR Controller when it near fuels or chemicals.

Power it off near Blasting Places

Please follow relevant restrictive regulations. Avoid using the device in blasting places.

Reasonable Use

Please install the product at suitable places as described in the product documentation. Avoid signal shielded by covering the mainframe.

Use Qualified Maintenance Service

Maintenance can be carried out only by qualified maintainer.

3. Standard Packing List

Control Unit X1, GSM ANT X1, User Manual X1,DS18B20(Temperature Sensor,0.5m)X1

Optional Accessories: Backup Battery(3.7V/1000mAH),Siren.

4. Physical Layout

4.1 Control Unit physical layout

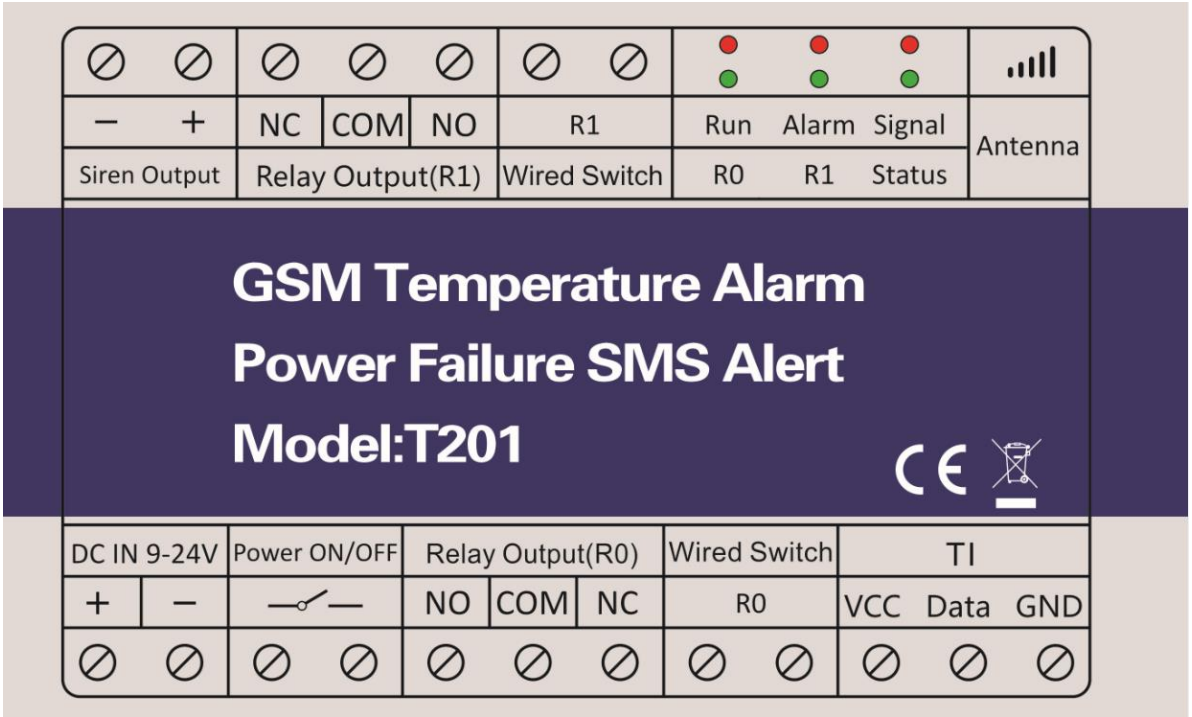

Interface Instruction

INDICATORS	
Antenna	Connect to GSM/3G/4G antenna
Signal	Flash per 1 second (quickly): registering to cellular network. Flash per 2 seconds: Normal status. OFF: Unable to connect to SIM card or unregistered to the cellular network.
Alarm	Flash per 300ms: Alarm occurrence

Run		Flash per 1 second: Connected the cellular network successfully. Always on: Reset successfully when pressing the Reset button. OFF: Unable to connect to SIM card or unregistered to the cellular network.
Status		ON: Enable the armed mode OFF: Disable the armed mode
R1		Relay(R1) Status, SMS remote control or Alarm occurrence in arm Status, the relay will work, this LED indicator will be on.
R0		Relay(R0) Status, calling in, the relay will work, this LED indicator will be on.
Connection Terminals		
DC IN 9~24V	**+**	Power supply input, Positive wire.
	-	Power supply input, Negative wire.
Power ON/OFF		ON: Short connection. OFF: Disconnect. Switch on/off the GSM Unit. If long time no use the unit, please disconnect them to save the battery.
Relay Output (R0)	**NO**	Normally Open port. The relay is 3A/240VAC. Connect to the switch of the electric lock or device.
	COM	Common port. The relay is 3A/240VAC. Connect to the switch of the electric lock or device.
	NC	Normally Close port. The relay is 3A/240VAC. Connect to the switch of the electric lock or device.
Wired Switch R0		Dry contact, used to be connected with wired switch, like push button. Notice: It should not be connected with voltage input.
TI	**VCC**	Connect to DS18B20 Sensor VDD wire. Red wire
	Data	DS18B20 Data wire. Yellow wire.
	GND	DS18B20 GND wire. Black wire.
Siren Output	**+**	Output voltage is equal to Power supply input, Output Current:<=1A,connect to siren’s Positive wire.
	-	GND, connect to siren’s Negative wire.
Relay Output (R1)	**NO**	Normally Open port. The relay is 3A/240VAC. Connect to the switch of the electric lock or device.
	COM	Common port. The relay is 3A/240VAC. Connect to the switch of the electric lock or device.
	NC	Normally Close port. The relay is 3A/240VAC. Connect to the switch of the electric lock or device.
Wired Switch R1		Dry contact, used to be connected with wired switch, like push button. Notice: It should not be connected with voltage input.

5. Features

1. Can be operated from anywhere, no distance limitation.
2. Up to 200 authorized phone numbers. the 1st ~3rd user numbers can receive SMS,and the 4th ~6th user numbers can receive call while alarm occurrence.1~200 authorized phone numbers can call T201 to turn on/off the Relay0 free of charge
3. One Temperature sensor input, temperature measure range: -55~+125°C,accuracy:0.1°C.
4. External AC/DC Power status monitoring, AC/DC Power On/OFF will send SMS and call to 6 preset mobile phone immediately.
5. Timer Report—Can setup every x hours automatically send its status/value to 6 preset mobile phone immediately.
6. Support remotely read historic data via SMS.
7. An automation system. When the temperature, power alarm or normal, it can link to Realy1 to action.
8. A siren output.when Alarm occurrence,it will output for 30 seconds.
9. Rechargeable Backup Battery inside can last 6hour.
10. Secure - Using caller ID and password for identification, unknown callers are ignored.
11. Programmable by SMS Commands with password protection.
12. Based on GSM Network, applied to many applications. (temperature, power status, solar panel, dc voltage).

6. Settings (SMS Commands)

Notice:

1. *The default Password is **1234**.*
2. *All the settings are through SMS commands, please edit the below SMS commands in your cell phone, then send to the T201 Unit. The unit cannot support PIN Code Protected SIM Card.*
3. *You can program the T201 with SMS commands by using your phone. It is safe to do so because in addition to the fact that other people may not know the number of the SIM inserted in it, we also use a Password that makes it impossible for anybody, who doesn't know it, to access the system by chance.*
4. *The relay0 output will change the close or open status by every call in, please note it. Means the first time call it, it will close the relay to switch on the lock, if the second call in is in the setting time, then the unit will ignore the setting time, and open the relay, to switch off the lock or machine.*
5. *Remember that commands must be **CAPITAL Lock LETTERS**. It is PWD not pwd, CAP not Cap etc. Don't add spaces or any other character.*
6. *The **pwd** in the commands is means the password, when you use it, please in stand of it by the*

*digital number; the capital letters **PWD** is the command letter, use PWD directly.*

For example:
In UK, the country code is **0044**, or **+44** .
The user cell phone number is **3408888666** and has been assigned as the first user number, the SIM card number in the panel is **3408888555** .
Problem 1: Relay is activated but the first user have not received the SMS alert .
Solution: When you set the first number, you should add the country code in front of the **3408888666**. Then it means setup **00443408888666** instead of the **3408888666** .
Problem 2: The first user number can receive the Relay action message from the T201, but the T201 can not receive the commands from the first user number.
Solution: Please add country code to the SIM card number in the T201. The it means send SMS commands to **003408888555** to instead of **3408888555** .
Solution 3: When you use cell phone to dial another cell phone, what number it will be displayed then you can set this displayed number as the dial numbers; when you use cell phone send SMS to another cell phone, what number it will be displayed then you can set the displayed number as the first user number, just use the 00 to replace the "+", also, you can try the "+".

7. *For some GSM operators, they use different SMS parameter, the units cannot return the SMS confirmation is normally. It is not product problem. Also, you can try to add the country code before the number, see the below settings:*
8. *Please write down the Authorized number list in a paper for review it in the future.*
9. *If you want to reset the T201 to factory default, then please send pwd#RESET# (The unit will reply a message with Reset Success! Please Reboot your Device) or When the T201 works normally, you can press and hold the RESET button (Open the unit,you will see it) for several seconds until the Run Led is always ON, and then after 5 seconds ,it will reset the G205 to factory default and reboot automatically at once.*
10. *If the command is incorrect, the T201 will return: Command error, please resend command . So please check the Command, or add the country code before the telephone number or check the input is in ENGLISH INPUT METHOD and CAPS LOCK.*
11. *The SMS commands that you will certainly use in the T201 are the following instruction:*

6.1 Setup New Password

pwd#PWDnewpassword#PWDnewpassword#

Return SMS:**New Password:xxxx**

E. g.:**1234#PWD6666#PWD6666#**
'1234' :the device password(Default).
'6666' :new password.must be 4 digits.

6.2 Setup Authorized number

pwd#TELAuthorized Number#Serial Number#

Return SMS:**Serial Number:Authorized Number**

E.g.: **1234#TEL004413500001111#001#**

'1234' :the device password(Default).

'0044' :the country code of United Kingdom.

'13500001111' :the authorized number.

'001' :serial number.must be 3 digits.

Tips: 1. The authorized number means the one who can dial the T201 unit to turn on/off the relay0.

2. The authorized number of 001\002\003 position numbers can only receive SMS when alarm occurrence.004\005\006 position numbers can only receive call when alarm occurrence(if alarm occurrence, T201 will dial these numbers ,till any one answer it,just one time)

3. We highly recommend that the serial number of 001 is administrator' s cellphone number, because the Relay action message and Timer Report SMS only send to the first position number;

4. The Serial Number is the position to store the authorized number, from 001~200.

How to setup Device time?

1) Automatically get time and adjust the time from GSM Operator

pwd#TELSIMcard Number#201#

E. g.: **1234#TEL0044666666#201#**

'1234' :the device password(Default).

'0044' :the country code of United Kingdom.

'666666' :the SIM Card Number of the device.

2) Setup Time by SMS

If your GSM Operator cannot provide the time source then must setup the system time after power on. Otherwise, the T201 will run it at mistake time. If you GSM Operator can provide time source, then no need to setup this time, but must setup the SIM Card number as first.

pwd#DYYMMDD#HHMM#

YY:year,must be 2digits

MM:month,must be 2digits

DD:day,must be 2digits

HH:hour,must be 2digits

MM:minute,must be 2digits

E.g.: **1234#D200518#1216#**

‘1234’ :the device password(Default).
‘20’ :year.
‘05’ :month.
‘18’ :day.
‘12’ :hour.
‘16’ :minute.

6.3 Inquiry the Serial Number’ s Authorized number

pwd#TELSerial Number?

E.g.: **1234#TEL002?**
‘1234’ :the device password(Default).
‘002’ :serial number
If you just want to Inquiry 001~006 position numbers,you can send this command below:

pwd#CC#

6.4 Remove the Authorized Number

(Or you can overwrite with another number you wish to change it).

pwd#TEL#Serial Number#

E.g.: **1234#TEL#012#**
‘1234’ :the device password(Default).
‘012’ :remove the authorized number at position 12
If you just want to remove 001~006 position numbers,you can send this command below:

pwd#DD#

6.5 Setup any phone number could dial to access the relay0

pwd#AA#

Tips: This command allows anybody calling the SIM number to access the relay0.
Warning! With the command above, it will allow anyone to access the relay0.

6.6 Setup only authorized number can access the relay0 (Default)

pwd#AU#

Tips: With the command above, you could allow the authorized number can access the relay0.
This is the default settings.
Inquiry this setting:

pwd#AC?#

Reply: **Allow all numbers can access it** or **Allow User Numbers can access it only**

6.7 Setup the relay 0 close time

pwd#GOTTime#

Tips: The time should be in 0~9.5seconds.

This command is useful in case you need to keep the relay0 closed (or button pressed) longer. The default time is 0.5 seconds(500 ms). You can change it with the GOT command. The relay0 closed time is twice as the number you set, E.g.: if you set **pwd#GOT19#**, means the relay0 closed 19/2=9.5 Seconds.

To check the value, you can use the command **pwd#GOT?** , the unit will reply the current value.

If you want to let the relay0 always closed until you call it next time, then you can set the time as 00, the format is **pwd#GOT00#**, the relay0 will be always closed until next time call in. in this case, only the authorized number can access it. The other unauthorized numbers can not access the unit. This is very useful for remote switch on or switch off the electricity appliance or equipment or device for a long time.

6.8 Enable return SMS confirmation when Relay0 action

pwd#R#

Tips: if you enable it, when the relay0 action, close or open, the unit will return a SMS confirmation to you(The first user number). The return SMS is: **Relay ON! Operated by xxx** or **Relay OFF! Operated by xxx**. You can disable it by the following command: **pwd#N#**. Default is no return SMS confirmation when relay is activated. This is very useful when you use the T201 to control the equipment remotely.

To check the settings, you can use the command: **pwd#M?**

It will return: **Relay action return SMS ON** or **Relay action return SMS OFF**.

6.9 Control the relay 0 ON/OFF by SMS command

pwd#ON#

Return SMS: The relay is ON.

pwd#OFF#

Return SMS: The relay is OFF.

6.10 Disable the armed mode (Default is disabled)

pwd#DA#

Return SMS: Disarmed.

Tips: If you want to use the alarm and interlock function, please enable it firstly.

Enable the armed mode

Tips: if you enable the armed mode, T201 will be in Armed status.when any alarm occurrence, it will start the siren (if you connected) or switch on the light (if you connect it) and send SMS to the 1st ~3rd user numbers and call to 4th~6th user numbers immediately.

pwd#EA#

Return SMS: Armed.

6.11 Setup the device description(Default :Description)

pwd#DTxxxxxxxxxxxx #

You can add description with T201(such as install position,user information),the description will show in SMS which the T201 send to you.The SMS Description message should less than 20 letters.

E.g.: **1234#DTMachine Room#**

'1234' :the device password(Default).

'Machine Room' :device description

6.12 Setup the interval report time

pwd#Cxx#yyy#

The interval report is interval to report the current status by SMS to the 1st Authorized number.

xx:the start time of send the SMS of the current status,unit:hour,range:00~23,must be 2 digits. Default:08.

yyy:the interval report time of send the SMS of the current status,unit:hour,range:000~240,must be

3 digits,000:disable this function,default:000

E.g.: **1234#C08#024#**

'1234' :the device password(Default).

'08' :the start time of send the SMS of the current status is 08:00

'024' :the interval report time of send the SMS of the current status is 24 hours

6.13 Setup the temperature threshold value

Setup the temperature threshold value:

pwd#TE±xxxx#±yyyy#

± **x**xxx:the low threshold value,range:-0550~+1250,must be 4digits, stands for real value x10,unit:0.1℃

± yyyy:the high threshold value,range:-0550~+1250,must be 4 digits, stands for real value x10,unit:0.1

-:degree below zero.

+:degree above zero

E.g.: **1234#TE-0105#+0388#**

'1234' :the device password(Default).

'-0105' :the low threshold value is -10.5℃

'+0388' :the high threshold value is +38.8℃

Tips: If you want to set 0℃,**±x**xxx,**±**yyyy:=+0000 or -0000.

±yyyy must be greater than **±x**xxx.

The value(Temperature high threshold value-Temperature low threshold value) is greater than the temp return difference value(vide infra).

6.14 Setup the temperature return difference value

To protect the heater or compressor and other devices from damage due to frequent start-up due to small temperature fluctuations. We can use return difference value to solve this problem.

Setup the temperature return difference value

pwd#TBxx#

xx:range:00~99,must be 2digits, stands for real value x10,unit:0.1℃,default:10.

E.g.: **1234#TB10#**

'1234' :the device password(Default).

'10' :the real return difference value is 1.0℃

How to understand return difference value?

E.g.:

Temperature high threshold value:38.8℃

Temperature low threshold value:10.8℃

The real return difference value is 5.0℃

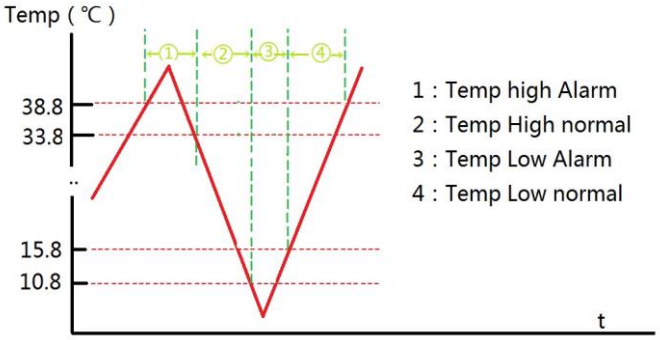

1)When the site temperature exceed 38.8℃,considered as high alarm

2)When the site temperature does not exceed 33.8℃(38.8-5.0=33.8) & exceeds 10.8℃,considered as high normal

3)When the site temperature does not exceed 10.8℃,considered as low alarm

4)When the site temperature exceeds 15.8℃(10.8+5.0=15.8)&does not exceed 38.8℃,considered as low normal

Tips:the temp return difference value is smaller than the value (Temperature high threshold value-Temperature low threshold value).

6.15 Inquiry historic record (Only can inquiry the latest 30 alarm events.)

pwd#HS#

Return SMS:

Alarm time
Alarm event
Alarm time
Alarm event
...

E.g.:

20/01/18,18:45:18
P-OFF
20/01/19,18:45:18
T:+35.3,H
20/01/20,18:45:18
T:+20.8,N
20/01/21,18:45:18
...

'P-OFF' :power supply is OFF

'T:+35.3,H' :temp high alarm

'T:+20.8,N' :temp recover normal

Delete historical record

pwd#DEHS#

Return SMS:Delete Success!

6.16 Setup the interlock Mode

If you want to use this function ,T201 must be in armed mode

There are 2 interlock events,but only the one(you choose) functions

1) Temp high alarm,relay1 ON.Temp low alarm,relay1 OFF
2) Power OFF,relay1 ON.Power ON,relay1 OFF

pwd#Ex#

x:range:0、1、3,default 0.

0:disable this interlock function.

1:enable temp interlock function.

3:enable humidity interlock function.

6.17 Inquiry Current Status

pwd#EE#

Return SMS:

Current time
Armed/disarmed status
GSM signal value
Current temp status
Power status
Relay 0 status
Relay 1 status
Total number of alarm records
Internal report time
Interlock mode
Device description

E.g.:

```
20/05/08,10:18:08
Armed
S:19
T:+030.7(+030.0/+033.0,1.0),N
P-ON
R0-ON
R1-OFF
R:28
C:08,024
E1
Machine room
```

'20/05/08,10:18:08' :20:year,05:month,08:day,10:hour,18:min,08:sec

'S:19' :range:0~31,GSM signal quality. we suggest to keep the signal level above 12, or it will be better above 16. If it is below 12, please make sure you had connected with an external GSM antenna, or take the device to a better open area where it will have a better GSM signal.

'T:+030.7(+030.0/+033.0,1.0),N' :current temp value:+30.7 ℃ , low threshold:+30.0 ℃ ,high threshold:+30.0 ℃ ,return difference:1.0 ℃ ,N:normal,H:high alarm,L:low alarm

'P-ON' :ON:External power supply is ON.OFF:External power supply is OFF

'R0-ON' :ON:the relay0 is ON.OFF:the relay0 is OFF

'R1-OFF' :ON:the relay1 is ON.OFF:the relay1 is OFF

'R:28' :Total number of alarm records is 28 ,range:0~30

'C:08,024' :the start interval report time:08:00.the interval report time;24 hours

'E1' :Temp interlock mode

'Machine room' :device description

6.18 The Alarm SMS message when alarm occurrence

Alarm SMS message format:

Temp high alarm

(Temp low alarm\Temp high normal\Temp low normal\Power ON\Power OFF)

Current status

6.19 Control the relay 1 ON/OFF by SMS command

Once use these commands,T201 will disable the interlock mode .if you want to use the interlock

mode again, you can resent command that enables the interlock mode

pwd#ON1#

Return SMS: The relay1 is ON.

pwd#OFF1#

Return SMS: The relay1 is OFF.

7. Installation

Before installing the control unit, please help to test the system firstly, including power supply, GSM signal, etc.

7.1 Insert SIM card into Control unit

Step 1: Open the device outside case with a tool like the picture below.

Step 2: Find the SIM card holder on the PCB board.

Step 3: Use your finger to push the SIM card cover, and insert the SIM card..

Step 4: Close the device case as the below picture shows.

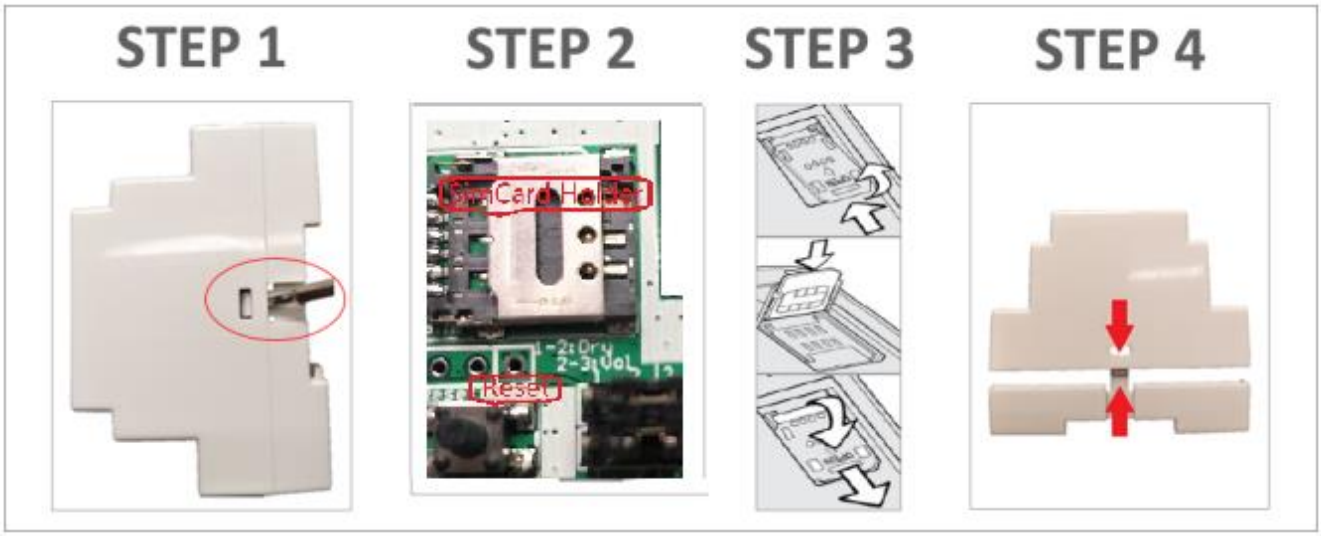

7.2 Connecting the Electronic Lock or Electric equipment

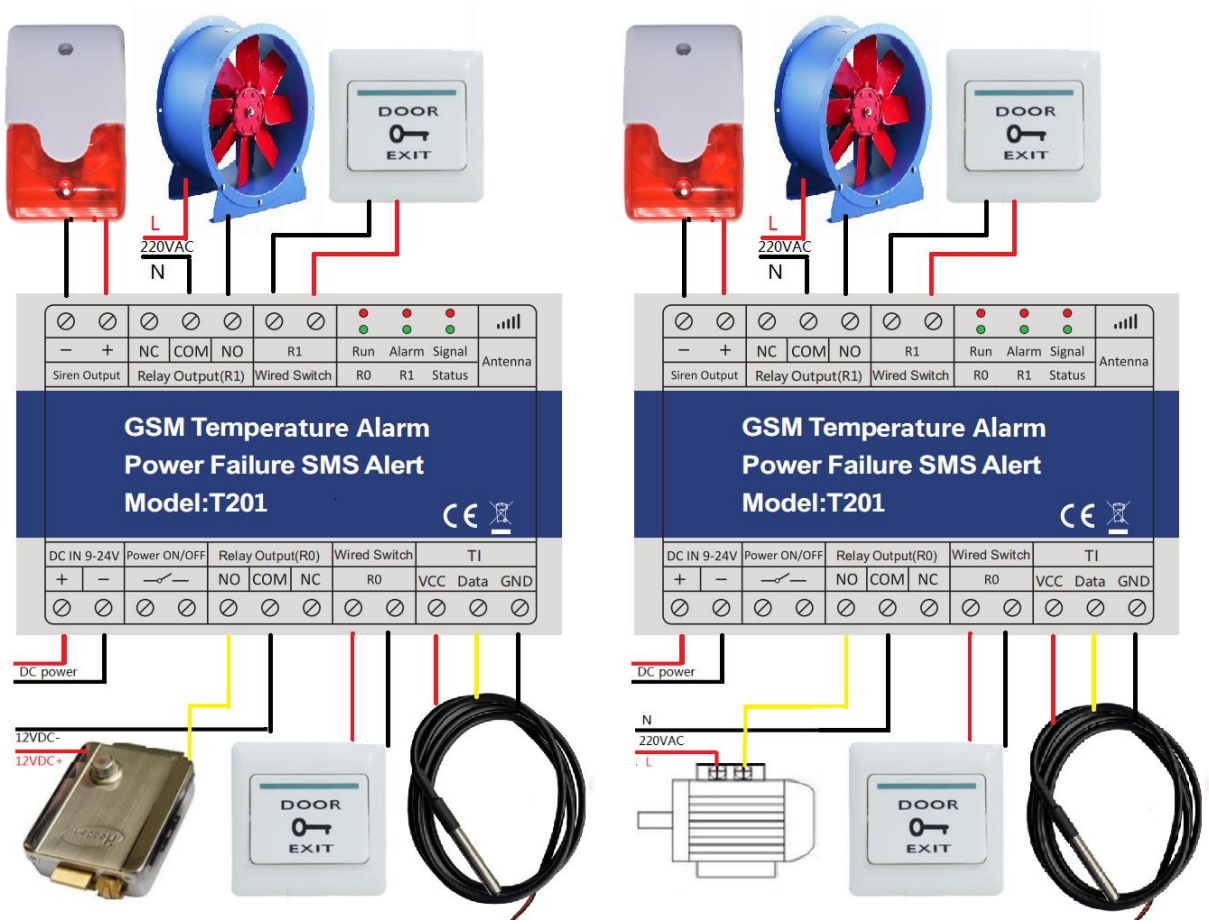

7.3 Install the Mainframe

The main frame should be installed in the position that person can’ t get it, and there with a power source as well as enough GSM signal coverage.

8. Technical specifications

Rated Voltage: DC 9V~24V/1A

Working temperature: -10℃ ~ +60℃

Storage temperature: -20℃ ~ +60℃

Relative humidity: 10-90%, No condensation

Work frequency:

GSM: 850/900/1800/1900MHz

3G WCDMA: 900/2100 MHz UMTS

3G CDMA2000:850/1900MHz UMTS

3G: 850/2100MHz UMTS

Communication protocol: GSM PHASE 2/2+ (include data service)

Related Voltage of the Output Relay: 3A/240V AC

SIM Card： Nano type, 3V

Antenna: 50 Ω SMA

Wired Switch: Supports

Temp&Humidity sensor:

Temperatures:-55-+125°C,accuracy:0.1℃

Siren output：output voltage=DC input voltage，current:<1A

Backup Battery:3.7V/1000mAH

Dimension: 96.5*72*59mm

Net Weight:188g

9. Important information

1) Please read the User Manual carefully before you install the Control Unit and set the Control Unit.
2) Install the system in a hidden place.
3) Avoid getting water into the Control Unit.
4) Have a secure connection to the main power supply.

10. Maintenance

1) In case of failure, please contact the distributor or manufacturer.
2) If the remote control works, but the Control Unit fails to send SMS texts, switch the power of Control Unit off and switch it on after one minute. Test this system after another minute, or check the settings are correct and the GSM Signals are strong enough.
3) If the Control Unit can run work, but cannot send SMS texts, please change SIM Card to check it.
4) If the problem cannot be solved, please contact the distributor or manufacturer.

11. Warranty

1) This system is warranted to be free of defects in material and workmanship for one year from the date of purchase.
2) This warranty does not extend to any defect, malfunction or failure caused by abuse or misuse by the Operating Instructions. In no event shall the manufacturer be liable for any system altered by purchasers.